# Power Distribution

## From Fuses to Relays and Components (cont'd)

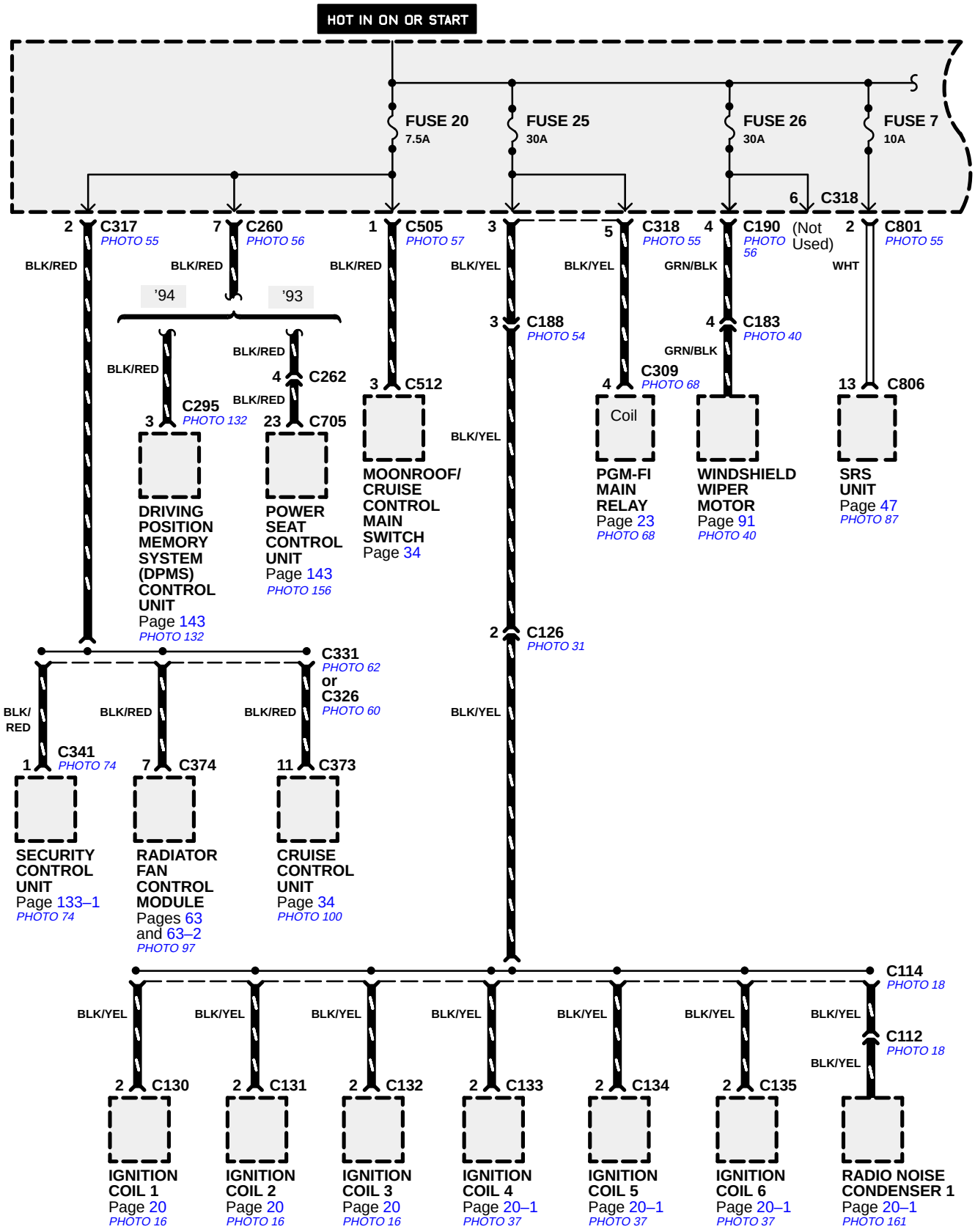


©2004 American Honda Motor Co., Inc.